STARENGTS

COMPANY PRESENTATION · 2026

We understand your process. Then we build the software.

A software company with 20+ years of manufacturing experience behind it.

Founded by Beena Rawat · Mumbai, India · starengts.com

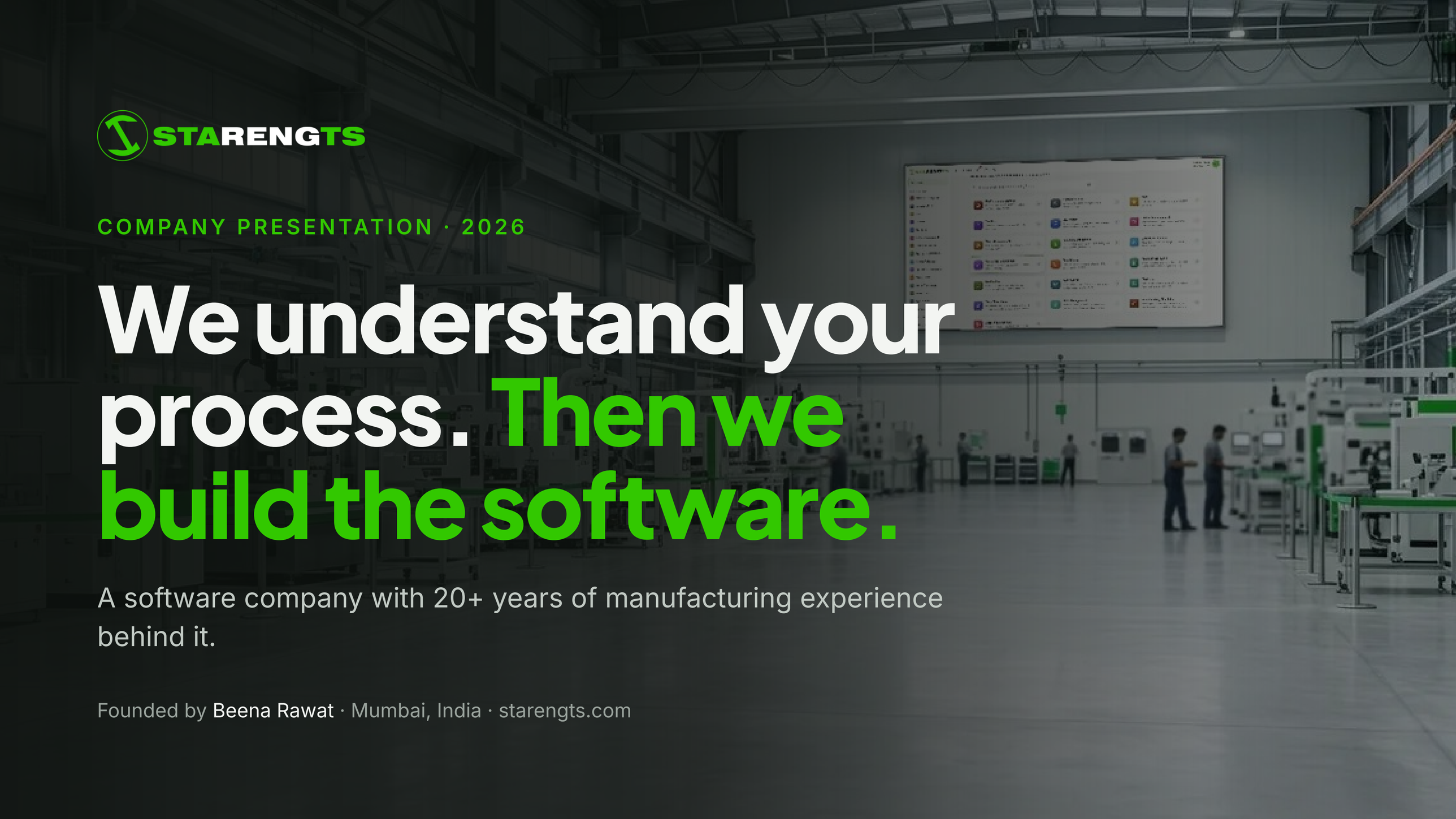



ABOUT STARENGTS

Beena Rawat

Founder

Starengts is a Mumbai-based software company. We build web apps, mobile apps, websites and AI for businesses in any industry, with 20+ years of manufacturing experience behind every product.

Based in	Platform	Products
Mumbai, India	**21 modules live**	**4 industries**

STARENGTS

WHO WE ARE

A software company that knows how operations really run.

We build web apps, mobile apps, websites and AI for any business. Our own manufacturing platform and ready-made industry products are built, live and ready to deploy.

20+
Years of manufacturing domain experience

21
Platform modules built and live

4
Industries with ready-made products

AI
Built, tested and deployed with AI

STARENGTS

OUR DIFFERENCE

Most software companies start with code. We start on your floor.

We learn how the work really runs, where time and money leak, and what your people actually need. Then we build the software that fits.



Before

Paper, Excel and WhatsApp. Typed again later, searched for at audit time.



After

Entered once at the machine. Everyone sees it the same second.

STARENGTS

WHAT WE DO

Need software built? We build it.

Advisory

We study the process on your floor and tell you the right fix, even when it is not our product.

Our platform

21 modules built and live. New ones built inside the same platform.

Web & mobile apps

Portals, ERPs, workflow apps and Android/iOS apps, for any industry.

AI & agents

Assistants on your own documents and agents that update records.

Websites & stores

Fast, search-friendly sites with enquiries, payments and analytics.

Rollout & support

Training, data migration, SAP and machine integration, cloud or on-premise.

STARENGTS

STARENGTS PLATFORM

Already built. Already live.

One login, one plant hierarchy, one audit trail. Switch on the modules you need today and add more as you grow.

- SAP: orders in, confirmations out
- Cloud or on your own servers
- Your logo and colour theme

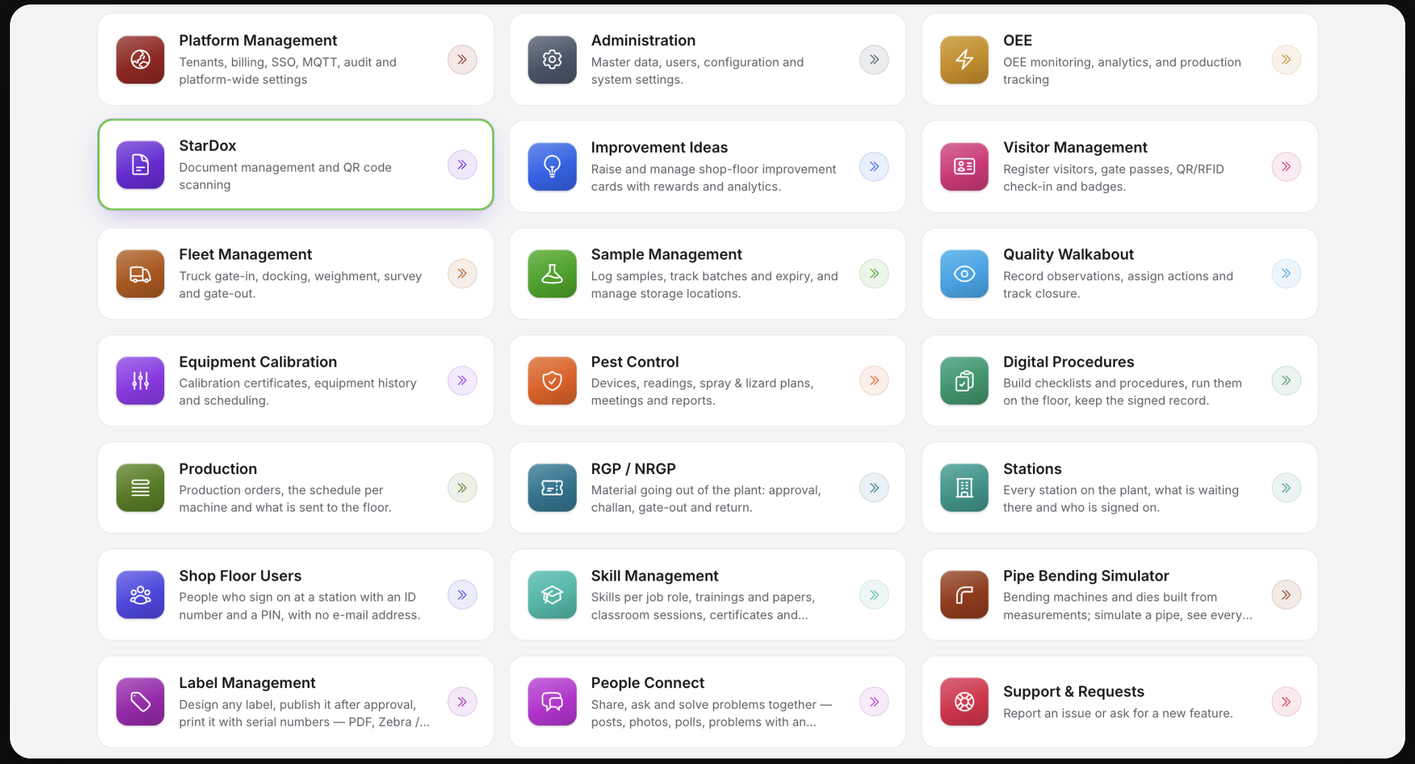

STARENGTS

FROM THE GATE TO THE SHOP FLOOR

21 modules live. Yours can be the next.

Operations **OEE**	Operations **Production**	Operations **Stations**	Improvement **Improvement Ideas**	Quality **Sample Management**	Quality **Quality Walkabout**
Quality **Equipment Calibration**	Documents **StarDox**	Procedures **Digital Procedures**	Labels **Label Management**	Security **Visitor Management**	Logistics **Fleet Management**
Logistics **RGP / NRGP**	Compliance **Pest Control**	Workforce **Skill Management**	Workforce **Shop Floor Users**	Collaboration **People Connect**	Engineering **Pipe Bending Simulator**
Admin **Administration**	Platform **Platform Management**	Support **Support & Requests**	On request **Your next module**		

STARENGTS

ON THE SHOP FLOOR

Every line, every shift, on one screen.

Machines report on their own

Gateways over MQTT, Modbus, OPC UA or S7. No rewiring, no typing numbers in at shift end.

Works on the phone in their pocket

Operators sign in at a station with an ID and PIN. Log output or raise an improvement idea in two taps.





SOLUTION WALKTHROUGH

One shift in a digital plant, hour by hour.

06:00

Visitor & Fleet

Trucks are weighed and contractors check in. Every entry is logged.

06:30

OEE

Line 2 starts. A stoppage shows in seconds, not at shift end.

09:12

Improvement Ideas

An operator raises an idea or problem in two taps. It is tracked to closure.

11:00

QC & Calibration

Samples logged to plan. An instrument due for calibration is flagged.

14:00

StarDox

A new work instruction is live at every station after one QR scan.

22:00

Shift handover

The shift report compiles itself. The next shift starts informed.

One platform. One audit trail. Every event above is connected.

STARENGTS

BUILT ON REQUEST

Pipe Bending Simulator

Bending machines and dies are modelled in 3D from measurements, so every pipe is simulated and checked for collisions before it reaches the machine.

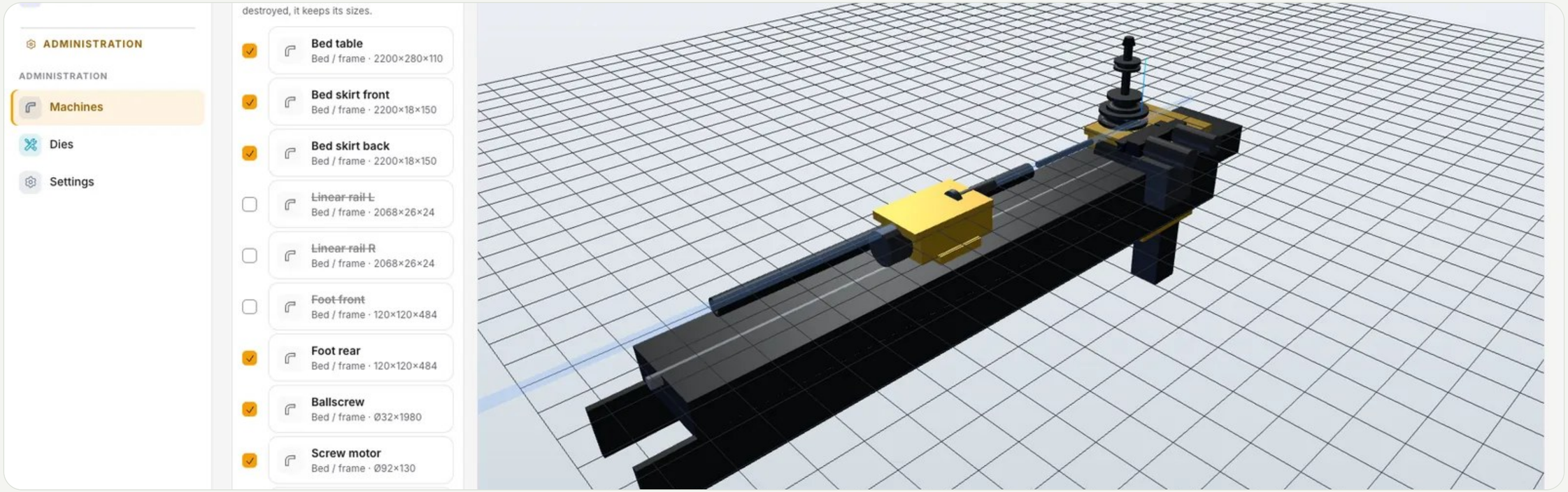

STARENGTS

READY-MADE PRODUCTS

Built, live and ready to deploy.



School & College ERP

Admissions, fees with GST invoices and Razorpay, attendance, exams, LMS and a parent portal. 18 built-in roles, multi-campus.

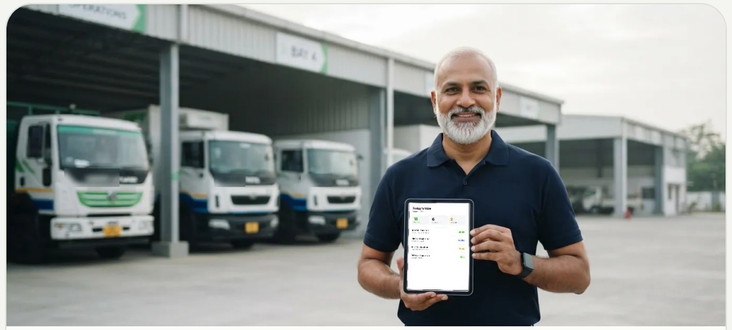

Transport Management

Every vehicle and trip, document expiry alerts (RC, insurance, PUC, permits) and online payments via Razorpay.

Smart Home Platform

For installers: switches, plugs and lights over Tasmota (MQTT) or Tuya Cloud, scenes, schedules, energy data and multi-home sharing.

STARENGTS

AI-POWERED

AI in what we build. And in how we build it.

For your business

Assistants on your own data. Ask in plain language, get answers from your SOPs and records.

Agents that do the work. Read invoices, forms and e-mails, then create the record.

Early warnings. Downtime, quality drift or expiring certificates, before they hurt.

In our engineering

Faster builds. AI-assisted development means working software in days, not months.

Automated testing. Every change is tested before it reaches you.

Automated deployment & recovery. Services restart on their own if something fails.

STARENGTS

HOW WE CREATE VALUE

Seven steps from machine to money.
AI speeds up every one.



Connect
Machines linked (IIoT)

Maps tags, suggests sensors

Collect
One place: DB, SAP, sheets

Writes the connectors

Transform
Clean and correct before use

Flags bad data, drafts rules

Visualize
Live BI dashboards

Drafts dashboards from plain words

Analyze
Top 5 downtime causes

Daily Pareto and summary

Predict
Failure warned before it happens

Builds and explains models

Decide
Fix causes, maintain early

Drafts work orders and alerts

Business value
- ✓ Higher uptime and OEE
- ✓ Less data capturing
- ✓ Decisions on the spot
- ✓ Lower repair cost
- ✓ Better expansion plans

In our experience, most of the value comes from steps 5 to 7. We first map where your plant stands today.

● AI does the heavy lifting. People decide.

STARENGTS

IN EVERY PRODUCT

Production-ready, not prototypes.

Role-based access

Every user sees only what their role allows.

Full audit log

Who did what, and when. Every action traceable.

Multi-tenant

Many plants on one deployment, data kept separate.

Cloud or on-premise

Your servers or hosted. Your choice.

MQTT & IIoT ready

Connects to existing machines, no rewiring.

QR, barcode, RFID

Scan a code and the right screen opens.

Excel & SAP

Bring data in, take any report out.

Installable web app

Works on any device, installs like an app.

STARENGTS

HOW WE WORK

Five steps. One clear outcome.

01

Study

Time on your floor or in your office, learning the real constraints.

02

Suggest

An honest pick: our software, a market product, or a custom build.

03

Build

A first working version to test within 7 days of agreed requirements.

04

Test

Automated tests on every change, then checks with your team on real data.

05

Deploy

Rollout, training and support until it runs smoothly.



STARENGTS

WHY STARENGTS

We know how operations run. We know how to build software.

We study your process, not your budget

Every engagement starts by mapping how your work actually runs.

Honest advice, even if it is not ours

If a market product fits you better, we will tell you.

Finished software, ready on day one

Authentication, roles, audit logs and deployment are already built.

You talk to the builders

Phone and e-mail straight to the team, no ticket queue.

STARENGTS

FOUNDING PARTNER PROGRAMME

Be one of our first five partners.

We are a young company with finished, working software. We want a small group of early partners who help shape it, and get more from us in return.

Guided pilot

One line, process or site, set up with you.

Special pricing

Founding-partner pricing for the first five.

Your priorities first

Your modules and changes go to the front.

Direct access

Talk to the people who build it.

What we ask: honest feedback and a short story of what changed, without your company name if you prefer.

STARENGTS

Tell us how your work runs today.

We will show you what software can change. A platform demo, a custom app, a website or an AI integration: let’s talk.



WhatsApp
+91 98194 24646

E-mail
info@starengts.com

Web
starengts.com